Model No.LS002G 216MM DC SLIDE CPD. MITER SAW

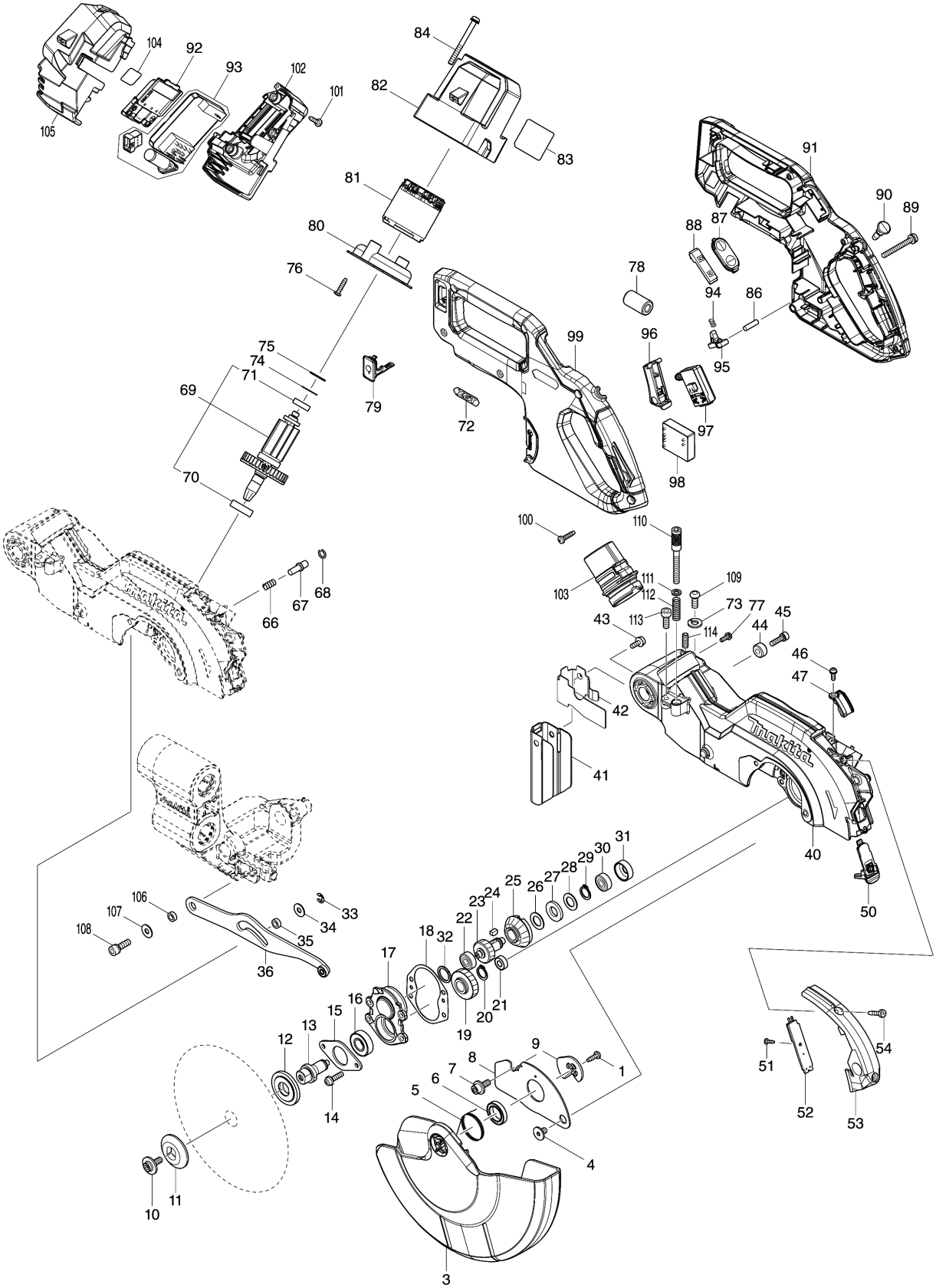

Model No.LS002G 216MM DC SLIDE CPD. MITER SAW

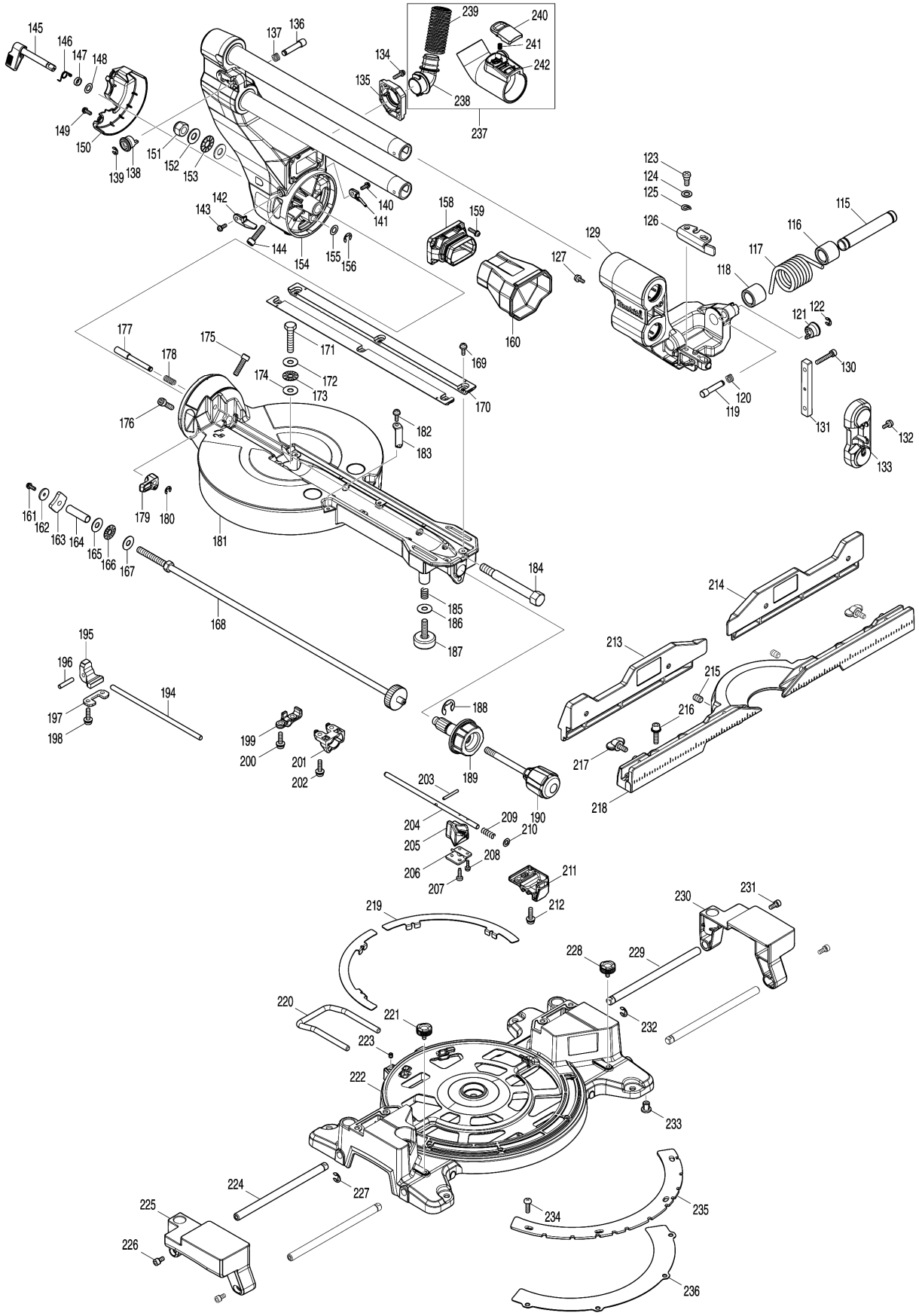

Model No.LS002G 216MM DC SLIDE CPD. MITER SAW

Item	Parts No.	Description	I/C	Qty	New/Old	Opt. 1	Opt. 2	Note
001	266192-7	自攻螺釘4X14 - GA4031		1				
003	412933-1	SAFETY COVER		1				
004	265985-9	內六角頭螺栓M6 - LS1040		1				
005	232311-7	扭簧30 - DLS600		1				
006	210150-5	球軸承6803DDW - DLS600		1				
007	266732-1	HEX. SOCKET HEAD BOLT M6X16		1				
008	347731-3	CENTER COVER		1				
009	347059-9	中間板 - DLS600		1				
010	266733-9	HEX. S.F.H. BOLT M6X16		1				
011	224275-9	外壓板40 - SR2600		1				
012	224614-3	INNER FLANGE 40		1				
013	327697-3	SPINDLE		1				
014	911233-1	盤頭螺絲M5X20 - 5012B		4				
015	285043-5	BEARING RETAINER 52		1				
016	211131-2	球軸承6001DDW - 9403		1				
017	312A44-7	BEARING BOX		1				
018	422652-1	GASKET		1				
019	227838-0	HELICAL GEAR 43		1				
020	961052-5	擋圈S-12		1				
021	210006-2	球軸承696ZZ - 2106		1				
022	211021-9	球軸承627LLB - 9520B		1				
023	227837-2	HELICAL GEAR 30		1				
024	254011-9	鍵4 - MT955		1				
025	227836-4	SPIRAL BEVEL GEAR 33		1				
026	253744-3	平墊圈12		1				
027	261104-5	RUBBER WASHER 12		1				
028	253744-3	平墊圈12		1				
029	961052-5	擋圈S-12		1				
030	211021-9	球軸承627LLB - 9520B		1				
031	424605-6	RUBBER RING 19		1				
032	261153-2	URETHAN WASHER 15		1				
033	961018-5	擋圈E-5		1				
034	253804-1	平墊圈6 - HR4000C		1				
035	257163-5	環 15 - LS1016L		1				
036	140W98-4	LINK PLATE COMPLETE		1				
040	140W84-5	BLADE CASE COMPLETE		1				
C10	263002-9	橡膠銷4 - 63004		3				
C20	422724-2	CUSHION		1				
C30	322316-6	LINK SHAFT		1				
041	422651-3	GUARD		1				
042	345438-5	GUARD PLATE		1				

Please order the parts with part number.

Print Date 21/1/2021

Model No.LS002G 216MM DC SLIDE CPD. MITER SAW

Item	Parts No.	Description	I/C	Qty	New/Old	Opt. 1	Opt. 2	Note
043	911119-9	盤頭螺絲M4X12 - BO6040		1				
044	257785-1	SLEEVE 6		1				
045	922226-3	內六角頭螺栓M5X18 - HM0810		1				
046	911118-1	盤頭螺絲M4X12 - BO4510		1				
047	458075-7	蓋片 - DLS600		1				
050	140X03-7	LENS COMPLETE		1				
051	266421-8	TAPPING SCREW 3X10		1				
052	620E07-6	LED CIRCUIT		1				
053	141A59-5	LED COVER COMPLETE		1				
C10	8024V4-4	CAUTION LABEL		1				
C20	931102-0	六角螺母M4		1				
054	266034-5	自攻螺釘CT4X16		2				
066	231240-1	壓簧7 - 2414		1				
067	256633-1	銷6 - 4110B		1				
068	231928-3	彈性環8 - 4110C		1				
069	519649-0	ROTOR ASS'Y		1				
D10		INC. 70,71						
070	211131-2	球軸承6001DDW - 9403		1				
071	210017-7	球軸承607DDW - BJR240		1				
072	8024V5-2	XGT LOGO LABEL		1				
073	942151-2	彈簧墊圈6		1				
074	253842-3	平墊圈14 - 6095DW		1				
075	261153-2	URETHAN WASHER 15		1				
076	265995-6	自攻螺釘4X18		2				
077	911118-1	盤頭螺絲M4X12 - BO4510		1				
078	688162-0	LINE FILTER		1				
079	140F99-0	蓋 - DGA701/DGA901		1				
C10	213218-6	O型圈 - HM1306		1				
C20	818H07-8	CAP LABEL		1				
080	459933-0	BAFFLE PLATE		1				
081	629A26-5	STATOR		1				
082	412926-8	MOTOR HOUSING		1				
083	858A05-8	LS002G NAME PLATE		1				
084	911278-9	PAN HEAD SCREW M5X55		4				
086	256123-4	銷5 - HR2010		1				
087	140X02-9	SWITCH PLATE COMPLETE		1				
C10	8024V3-6	SWITCH LABEL		1				
088	631973-2	開關 - BUB360		1				
089	911268-2	PAN HEAD SCREW M5X45		1				
090	417113-4	開關按鈕		1				
091	183R96-5	HANDLE SET		1				

Please order the parts with part number.

Print Date 21/1/2021

Model No.LS002G 216MM DC SLIDE CPD. MITER SAW

Item	Parts No.	Description	I/C	Qty	New/Old	Opt. 1	Opt. 2	Note
D10		INC. 99						
092	632P64-8	TERMINAL UNIT		1				
093	620E06-8	CONTROLLER		1				
094	231026-3	COMPRESSION SPRING 4		1				
095	416533-9	LOCK OFF LEVER		1				
096	459966-5	SWITCH LEVER		1				
097	651083-9	SWITCH C3XA-1PSPM		1				
098	620E08-4	POWER SUPPLY CIRCUIT		1				
099	183R96-5	HANDLE SET		1				
D10		INC. 91						
100	265995-6	自攻螺釘4X18		6				
101	265995-6	自攻螺釘4X18		3				
102	183R92-3	BATTERY HOUSING SET		1				
C10	263005-3	橡膠銷6 - 2414B		2				
D10		INC. 105						
103	459250-8	集塵管 - DLS211		1				
104	858A11-3	LS002G SERIAL NO. LABEL		1				
105	183R92-3	BATTERY HOUSING SET		1				
C10	263005-3	橡膠銷6 - 2414B		2				
D10		INC. 102						
106	257163-5	環 15 - LS1016L		1				
107	253804-1	平墊圈6 - HR4000C		1				
108	922331-6	內六角頭螺栓M6X20		1				
109	265484-1	H.S.BUTTON HEAD SCREW M6X17		1				
110	265B58-0	HEX SOCKET HEAD BOLT M6X45		1				
111	941152-7	平墊圈6 - 2106		1				
112	233343-7	壓簧7 - HR2450		1				
113	266757-5	HEX. SOCKET HEAD BOLT M6X16		1				
114	266321-2	H.S.SET SCREW(FLAT POINT)M6X16		1				
115	327710-7	ROD 16		1				
116	416905-8	SLEEVE 17-23		1				
117	231685-3	TORSION SPRING 29		1				
118	416905-8	SLEEVE 17-23		1				
119	327702-6	LOCK PIN 7-9		1				
120	234316-3	COMPRESSION SPRING 7		1				
121	271428-1	KNOB 20		1				
122	961018-5	擋圈E-5		1				
123	251267-5	十字槽盤頭螺絲M6X		1				

Model No.LS002G 216MM DC SLIDE CPD. MITER SAW

Item	Parts No.	Description	I/C	Qty	New/Old	Opt. 1	Opt. 2	Note
124	253215-0	平墊圈8		1				
125	253948-7	波形彈性墊圈8 - LS1020		1				
126	344643-1	STOPPER ARM		1				
127	911119-9	盤頭螺絲M4X12 - BO6040		2				
129	140W83-7	FRONT ARM COMPLETE		1				
C10	263005-3	橡膠銷6 - 2414B		2				
130	922251-4	HEX. SOCKET HEAD BOLT M5X30		2				
131	327705-0	SQUARE ROD		1				
132	911118-1	盤頭螺絲M4X12 - BO4510		1				
133	412938-1	RAIL HOLDER		1				
134	911128-8	盤頭螺絲M4X16 - LS1440		2				
135	412947-0	INLET		1				
136	327702-6	LOCK PIN 7-9		1				
137	234316-3	COMPRESSION SPRING 7		1				
138	271428-1	KNOB 20		1				
139	961018-5	擋圈E-5		1				
140	911118-1	盤頭螺絲M4X12 - BO4510		1				
141	412943-8	INDICATION PLATE R		1				
142	412942-0	INDICATION PLATE L		1				
143	911118-1	盤頭螺絲M4X12 - BO4510		1				
144	251582-7	內六角頭螺栓M6X25 - DLS600		1				
145	271466-3	LEVER 30		1				
146	232651-3	TORSION SPRING 8		1				
147	257848-3	RING 8		1				
148	253215-0	平墊圈8		1				
149	911118-1	盤頭螺絲M4X12 - BO4510		2				
150	412934-9	ARM COVER		1				
151	252130-5	六角鎖緊螺母M10-17		1				
152	253024-7	平墊圈10 - 2704		2				
153	216413-7	THRUST NEEDLE CAGE 1024		1				
154	140W82-9	ARM COMPLETE		1				
C10	8024V1-0	INDICATION LABEL		1				
155	253215-0	平墊圈8		1				
156	961013-5	擋圈E-7 - LS1016		1				
158	412944-6	DUST GUIDE HOLDER		1				
159	911128-8	盤頭螺絲M4X16 - LS1440		4				
160	422648-2	DUST GUIDE		1				
161	911118-1	盤頭螺絲M4X12 - BO4510		1				
162	253400-5	平墊圈4 - DJR188		1				

Model No.LS002G 216MM DC SLIDE CPD. MITER SAW

Item	Parts No.	Description	I/C	Qty	New/Old	Opt. 1	Opt. 2	Note
163	347759-1	LOCK PLATE		1				
164	257849-1	SLEEVE 8		1				
165	253731-2	平墊圈8		1				
166	216415-3	推力滾針軸承821 - 6823		1				
167	253731-2	平墊圈8		1				
168	162942-7	LOCK SHAFT COMPLETE		1				
169	911119-9	盤頭螺絲M4X12 - BO6040		6				
170	412940-4	KERF BOARD		2				
171	265442-7	HEX. BOLT M8X40		1				
172	253731-2	平墊圈8		1				
173	216415-3	推力滾針軸承821 - 6823		1				
174	253731-2	平墊圈8		1				
175	251582-7	內六角頭螺栓M6X25 - DLS600		1				
176	251582-7	內六角頭螺栓M6X25 - DLS600		1				
177	327704-2	STOPPER ROD		1				
178	234122-6	COMPRESSION SPRING 6		1				
179	271465-5	LEVER 24		1				
180	961018-5	擋圈E-5		1				
181	140W81-1	TURN BASE COMPLETE		1				
C10	8024U7-1	BEVEL SCALE LABEL		1				
C20	8024U8-9	INDICATION LABEL		1				
C30	812X85-6	CAUTION LABEL		1				
C40	813L22-1	CAUTION LABEL		2				
182	911119-9	盤頭螺絲M4X12 - BO6040		1				
183	459928-3	INDICATION PLATE		1				
184	327698-1	CENTER SHAFT		1				
185	231418-6	壓簧9 - LC1210		1				
186	253731-2	平墊圈8		1				
187	266432-3	調整螺絲 M8X27 - DLS713Z		1				
188	961062-2	STOP RING E-12		1				
189	271464-7	GRIP 46		1				
190	271463-9	GRIP 38		1				
194	327700-0	LOCK ROD 6		1				
195	313326-4	TURN STOPPER		1				
196	256186-0	銷5 - EB7650TH		1				
197	347601-6	STOPPER HOLDER		1				
198	911233-1	盤頭螺絲M5X20 - 5012B		2				
199	312A46-3	PIN HOLDER		1				
200	911233-1	盤頭螺絲M5X20 - 5012B		2				
201	412941-2	LEAD BLOCK		1				

Model No.LS002G 216MM DC SLIDE CPD. MITER SAW

Item	Parts No.	Description	I/C	Qty	New/Old	Opt. 1	Opt. 2	Note
202	911233-1	盤頭螺絲M5X20 - 5012B		2				
203	256267-0	銷3 - DSC102		1				
204	327701-8	LOCK PIN 6		1				
205	412939-9	LEVER 38		1				
206	347760-6	LEVER PLATE		1				
207	266192-7	自攻螺釘4X14 - GA4031		1				
208	911013-5	PAN HEAD SCREW M3X10		2				
209	233201-7	COMPRESSION SPRING 6		1				
210	941152-7	平墊圈6 - 2106		1				
211	312A45-5	GEAR COVER		1				
212	911233-1	盤頭螺絲M5X20 - 5012B		2				
213	140W85-3	UPPER FENCE L COMPLETE		1				
C10	810503-4	CAUTION LABEL		1				
214	140W86-1	UPPER FENCE R COMPLETE		1				
C10	810503-4	CAUTION LABEL		1				
215	266089-0	H.S.SET SCREW(FLAT POINT)M8X12		2				
216	922344-7	H.S.H.BOLT M6X25 WITH WG		4				
217	265701-9	螺絲M6X14 - HR4002		2				
218	312A38-2	GUIDE FENCE		1				
219	347758-3	SLIDE PLATE		2				
220	327706-8	BASE SUPPORTER		1				
221	265785-7	THUMB SCREW M5X10		1				
222	140W80-3	BASE COMPLETE		1				
C10	810486-8	CAUTION LABEL		1				
223	266264-8	內六角頭螺栓M5X6 SS610D		1				
224	327703-4	ROD 10		2				
225	312A42-1	SUB BASE L		1				
226	922211-6	H.S.H.BOLT M5X12 WITH W		2				
227	961013-5	擋圈E-7 - LS1016		1				
228	265785-7	THUMB SCREW M5X10		1				
229	327703-4	ROD 10		2				
230	312A43-9	SUB BASE R		1				
231	922211-6	H.S.H.BOLT M5X12 WITH W		2				
232	961013-5	擋圈E-7 - LS1016		1				
233	286044-6	CAP 13		4				
234	251546-1	十盤頭螺絲O5 - LS1019		4				
235	347756-7	MITER SCALE PLATE		1				
236	347757-5	MITER LOCK PLATE		1				

Model No.LS002G 216MM DC SLIDE CPD. MITER SAW

Item	Parts No.	Description	I/C	Qty	New/Old	Opt. 1	Opt. 2	Note
237	127692-1	DUST NOZZLE ASSEMBLY		1				
D10		INC. 238-242						
238	412945-4	HOSE CONNECTOR		1				
239	245062-3	HOSE 20-0.4		1				
240	458939-5	塵管鈕扣 - DCL280F		1				
241	232485-4	壓簧5 - CL121D		1				
242	412946-2	HOSE JOINT		1				
A01	127693-9	VISE ASSEMBLY		1				
C10	312A56-0	VISE ARM		1				
C20	265785-7	THUMB SCREW M5X10		1				
C30	327707-6	VISE ROD		1				
C40	265B61-1	THUMB SCREW M10X70		1				
C50	253804-1	平墊圈6 - HR4000C		1				
C60	343651-9	VISE PLATE		1				
C70	251370-2	+ PAN HEAD SCREW M5		1				
A02	127512-9	DUST BAG ASSEMBLY		1				
C10	412411-1	FASTENER		1				
A03	762001-3	三角尺 - LS1016L		1				
A05	783022-2	HEX. WRENCH 5		1				
A06	E-07010	EFFICUT FOR WOOD CUTTING/ GENE		1				

Please order the parts with part number.

Print Date 21/1/2021