Model No. DCM501 CORDLESS COFFEE MAKER

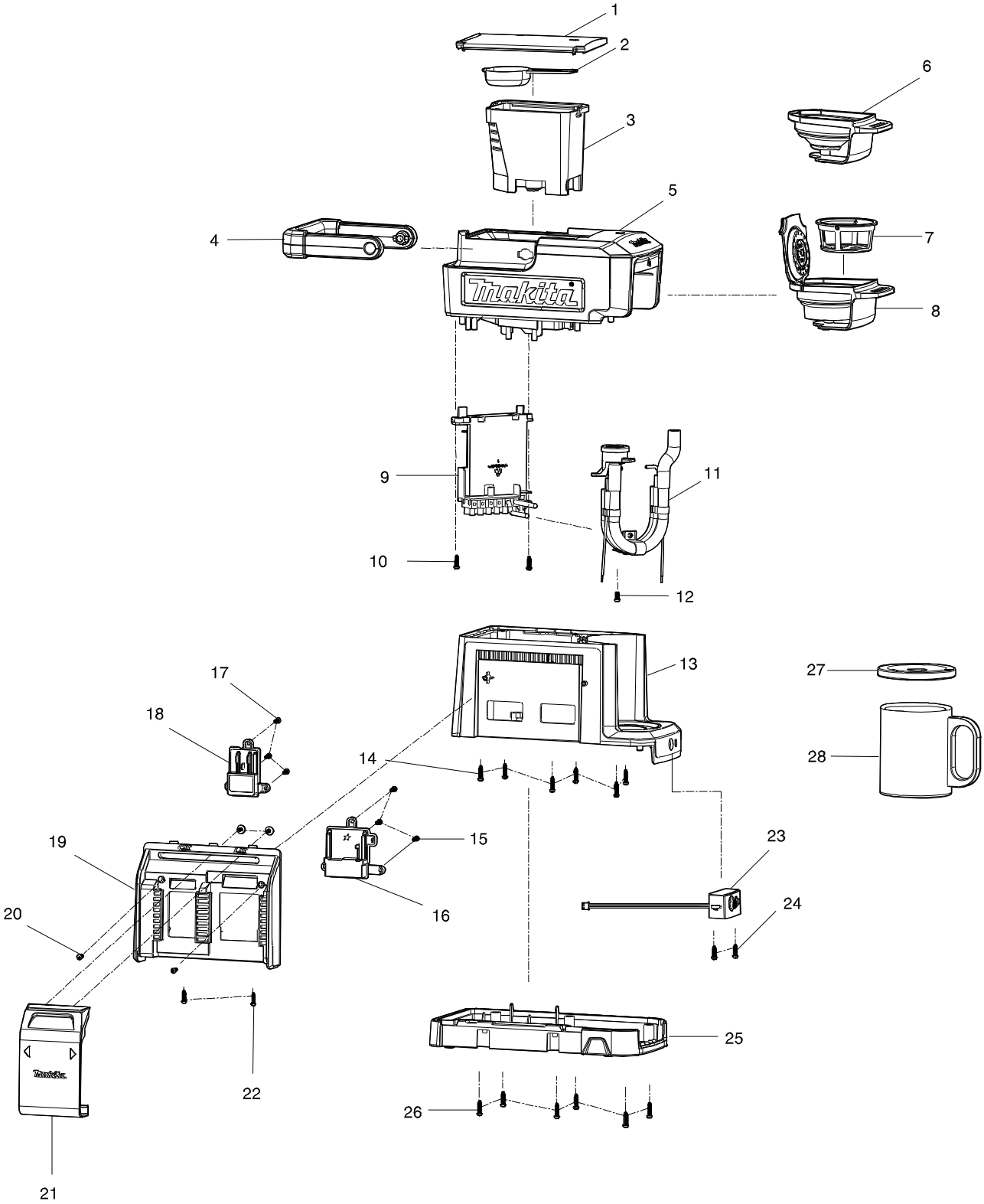

Model No. DCM501 CORDLESS COFFEE MAKER

Item	Parts No.	Description	I/C	Qty	N/O	Opt. 1	Opt. 2	Note
001	KF00000034	WATER TANK COVER		1				
002	KF00000033	SPOON		1				
003	KF00000019	WATER TANK SET		1	*			
003-1	KF00000053	WATER TANK SET	O	1				
004	KF00000017	HANDLE SET(BLUE)		1				
005	KF00000010	TOP&MIDDLE COVER SET(BLUE)		1	*			
005-1	KF00000042	TOP&MIDDLE COVER SET(BLUE)	O	1				
006	KF00000014	POD DRAWER		1	*			
006-1	KF00000045	POD DRAWER	O	1				
007	KF00000013	FILTER SET		1				
008	KF00000012	DRAWER SET		1	*			
008-1	KF00000044	DRAWER SET	O	1				
009	KF00000008	MAIN PCB SET		1				
010	KF00000002	SCREW 3X12		2				
011	KF00000009	HEATING TUBE SET		1				
012	KF00000002	SCREW 3X12		1				
013	KF00000003	MAIN BODY (BLUE)		1				
014	KF00000002	SCREW 3X12		6				
015	KF00000002	SCREW 3X12		3				
016	KF00000032	UNIVERSAL BATTERY HOLDER SET		1				
017	KF00000002	SCREW 3X12		3				
018	KF00000031	10.8V BATTERY HOLDER SET		1				
019	KF00000029	BATTERY BOX (BLUE)		1				
020	KF00000007	SCREW 3X10		2				
021	KF00000006	SLIDING COVER OF BATTERY SET		1				
022	KF00000002	SCREW 3X12		2				
023	KF00000005	BUTTON PCB ASSEMBLY		1				
024	KF00000002	SCREW 3X12		2				
025	KF00000001	BASE SET		1				
C10	KF00000028	FOOT		4				
026	KF00000002	SCREW 3X12		6				
027	KF00000021	CUP COVER		1				
028	KF00000020	CUP + SILK SCREEN		1				

Please order the parts with a part number.

Print Date 02/11/2018