Model No. DFJ201 CORDLESS FAN JACKET

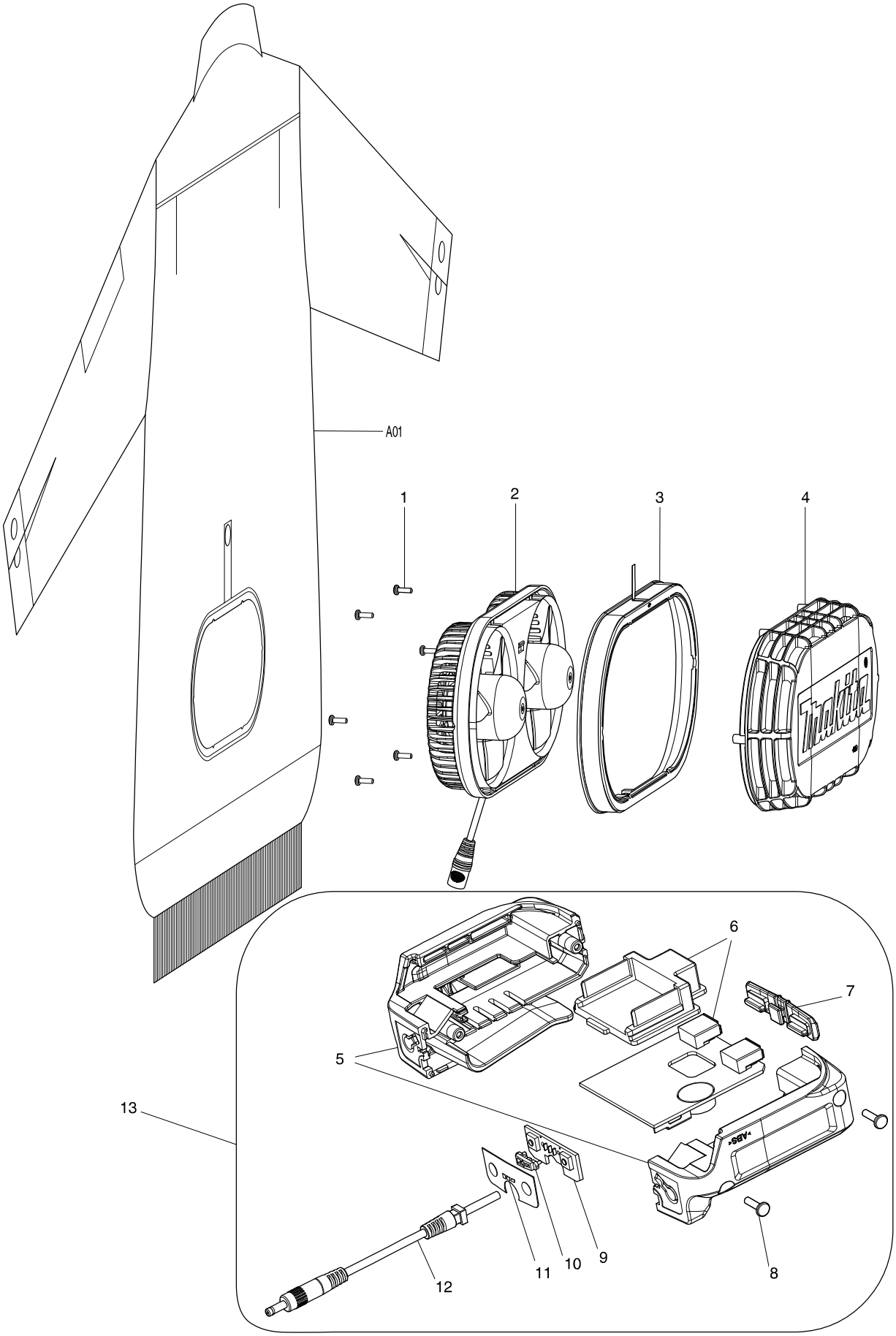

Model No. DFJ201 CORDLESS FAN JACKET

Item	Parts No.	Description	I/C	Qty	N/O	Sales	Purch.	Note
001	GM00001408	SCREW 2.6X8 PB		6				
002	GM00001442	FAN ASSEMBLY		1				
003	GM00001410	FAN BRACKET HOOD ASSEMBLY		1	*			
003-1	GM00001455	FAN BRACKET HOOD ASSEMBLY B	X	1				
004	GM00001411	FAN FRONT HOUSING		1				
005	GM00001399	BODY ASSEMBLY		1				
006	GM00001400	MAIN PCBA ASSEMBLY		1				
007	GM00001401	CLOSING PLUG		1				
008	GM00001402	SCREW 3X12		2				
009	GM00001403	SWITCH PCBA		1				
010	GM00001404	LED SUPPORT		1				
011	GM00001440	SWITCH LABEL		1				
012	GM00001439	POWER SUPPLY CORD		1				
013	GM00001441	BATTERY ADAPTER		1				
A01A	GM00001433	JACKET S		1				
A01B	GM00001434	JACKET M		1				
A01C	GM00001435	JACKET L		1				
A01D	GM00001436	JACKET XL		1				
A01E	GM00001437	JACKET 2XL		1				
A01F	GM00001438	JACKET 3XL		1				

Please order the parts with a part number.

Print Date 11/10/2016