Model No. MT241 355MM PORTABLE CUT-OFF

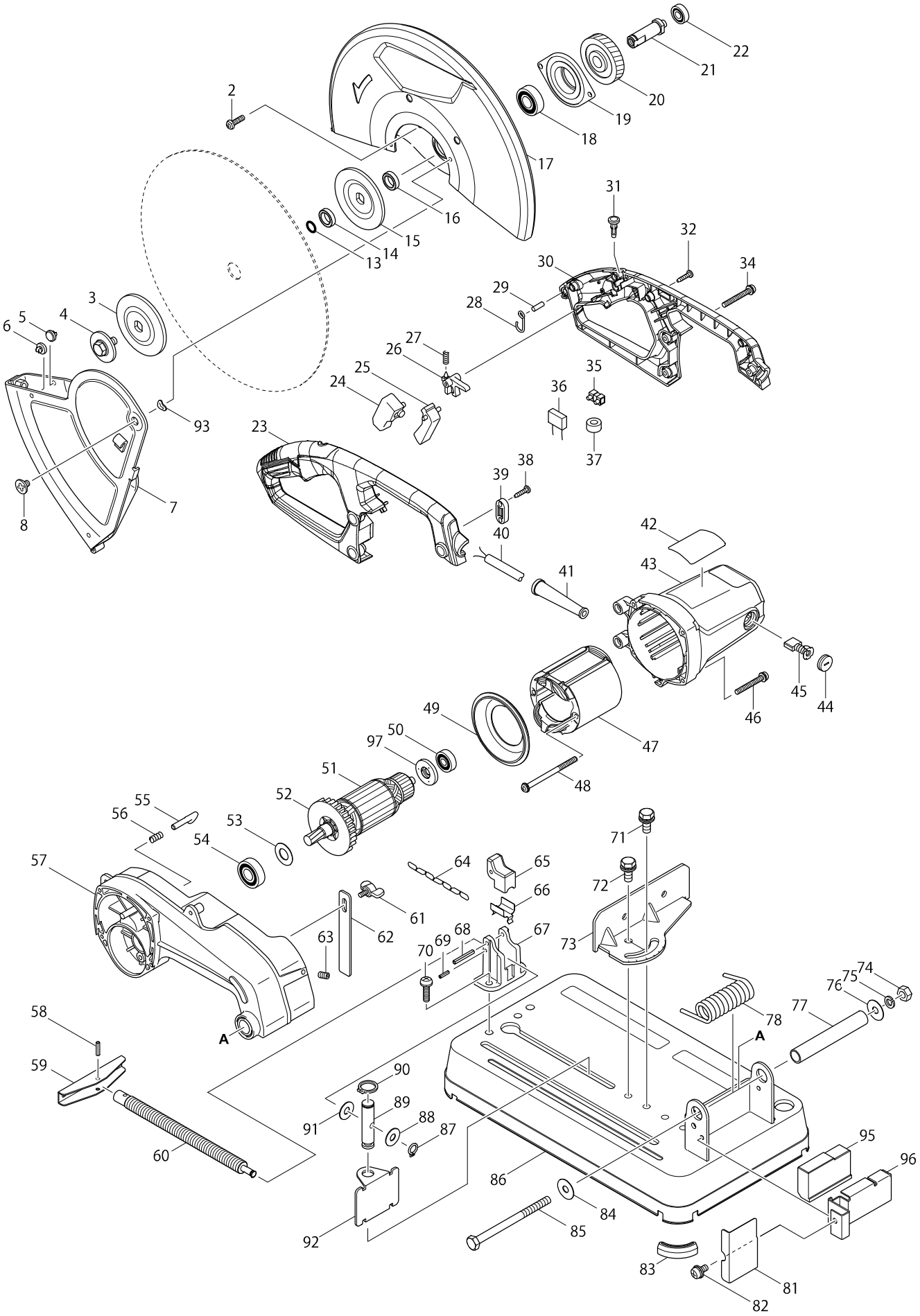

Model No. MT241 355MM PORTABLE CUT-OFF

Item	Parts No.	Description	I/C	Qty	N/O	Sales	Purch.	Note
002	265122-5	PAN HEAD SCREW M5X20		4				
003	224299-5	FLANGE 90		1				
004	251680-7	HEX. BOLT M10X25		1				
005	418142-0	PLUG		1				
006	418142-0	PLUG		1				
007	165350-1	SAFETY GUIDE		1				
008	265121-7	+ FLAT HEAD SCREW M6		1				
013	213180-5	O RING 14		1				
014	257255-0	RING 17		1				
015	224299-5	FLANGE 90		1				
016	257255-0	RING 17		1				
017	165647-8	SAFETY COVER		1				
018	211282-1	BALL BEARING 6203ZZ		1				
019	317663-8	BEARING BOX		1				
020	226572-9	HELICAL GEAR 49		1				
021	324321-9	SPINDLE		1				
022	210067-2	BALL BEARING 6000ZZ		1				
023	187128-2	HANDLE SET		1				
D10		INC. 30						
024	650545-4	SWITCH TGA115CT-2		1				
025	418141-2	SWITCH LEVER		1				
026	418139-9	SWITCH LOCK		1				
027	231397-8	COMPRESSION SPRING 4		1				
028	281216-8	HANGER		1				
029	268101-2	PIN 6		1				
030	187128-2	HANDLE SET		1				
D10		INC. 23						
031	418138-1	SWITCH BUTTON		1				
032	266326-2	TAPPING SCREW 4X18		4				
034	265104-7	PAN HEAD SCREW M5X40		3				
038	266326-2	TAPPING SCREW 4X18		2				
039	687124-5	STRAIN RELIEF		1				
040A	692506-8	POWER SUPPLY CORD 1.0-2-3.0		1				
040B	664478-7	POWER SUPPLY CORD #14-2-3.0		1				
041A	682540-6	CORD GUARD 9.3-90		1				
041B	682574-9	CORD GUARD 10-90		1				
042	896301-0	MT241 NAME PLATE		1				
043	140939-6	MOTOR HOUSING COMPLETE		1				
C10	643564-7	BRUSH HOLDER		2				
044	643700-5	BRUSH HOLDER CAP 7-18		2				
045	191953-5	CARBON BRUSH CB-203		1				
046	265104-7	PAN HEAD SCREW M5X40		4				
C10	654237-7	RING TERMINAL		2				
C20	654502-4	CONNECTOR P-2		2				
047A	596248-5	FIELD ASS'Y 220V		1				
047B	596246-9	FIELD ASS'Y 115V		1				
048	266328-8	TAPPING SCREW 5X80		2				
049	418143-8	BAFFLE PLATE		1				

Model No. MT241 355MM PORTABLE CUT-OFF

Item	Parts No.	Description	I/C	Qty	N/O	Sales	Purch.	Note
050	210070-3	BALL BEARING 6200ZZ		1				
D10		INC. 50,52-54,97						
051A	517863-2	ARMATURE ASS'Y 220V		1				
051B	518751-6	ARMATURE ASS'Y 100-115V		1				
052	240063-6	FAN 80		1				
053	267274-8	FLAT WASHER 15		1				
054	211240-7	BALL BEARING 6200ZZ		1				
055	324322-7	STOPPER		1				
056	233372-0	COMPRESSION SPRING 7		1				
057	153600-6	GEAR HOUSING COMPLETE		1				
C10	263029-9	RUBBER PIN 6		1				
058	951163-4	SPRING PIN 5-20		1				
059	272027-2	HANDLE 120		1				
060	324323-5	VISE SCREW		1				
061	265754-8	THUMB SCREW M6X12		1				
062	345310-1	STOPPER PLATE		1				
063	251961-9	H.S.SET SCREW(FLAT POINT)M6X10		1				
064	282015-1	CHAIN		1				
065	313114-9	VISE NUT		1				
066	345311-9	PLATE		1				
067	317662-0	SCREW GUIDE		1				
068	951175-7	SPRING PIN 5-36		1				
069	951110-5	SPRING PIN 4-16		1				
070	265125-9	PAN HEAD SCREW M8X30		2				
071	265508-3	HEX.BOLT M10X25		1				
072	265508-3	HEX.BOLT M10X25		1				
073	345315-1	GUIDE PLATE		1				
074	252183-4	HEX.NUT M10-17		1				
075	942251-8	SPRING WASHER 10		1				
076	267258-6	FLAT WASHER 10		1				
077	331648-0	PIPE 20-128		1				
078	231667-5	TORSION SPRING 24		1				
081	345313-5	SPARK GUARD		1				
082	265144-5	PAN HEAD SCREW M6X12		1				
083	421834-2	CUSHION		3				
084	267258-6	FLAT WASHER 10		1				
085	265509-1	HEX.BOLT M10X140		1				
086	165352-7	BASE		1				
087	961004-6	RETAINING RING S-8		1				
088	267257-8	FLAT WASHER 8		1				
089	256474-5	SHOULDER PIN 10-16		1				
090	961056-7	RETAINING RING S-16		1				
091	267257-8	FLAT WASHER 8		1				
092	345312-7	VISE PLATE		1				
093	253903-9	WAVE WASHER 6		1				
095	421870-8	RUBBER BLOCK		1				
096	345443-2	RUBBER CASE		1				
097	681630-2	INSULATION WASHER		1				

Model No. MT241 355MM PORTABLE CUT-OFF

Item	Parts No.	Description	I/C	Qty	N/O	Sales	Purch.	Note
A01	782210-8	SOCKET WRENCH 17		1				
A02	A-89545	CUTTING WHEEL 14"		1				

Please order the parts with a part number.

Print Date 11/10/2016